Work Order ID 68975

Tuesday, April 26, 2011 2:30:41 PM

Item ID: D204-635-041 **Accept** **Setup Start** **Stop**

Revision ID:

Item Name: Replacement Skidtube

Ship May 1 pm or sooner

Start Date: 4/27/2011 **Start Qty:** 1.00 **Cust Item ID:**

Required Date: 5/10/2011 **Req'd Qty:** 1.00 **Customer:**

Reference:

Approvals: **Process Plan:** VMF **Date:** 11-04-26 **Tooling:** **Date:** **Run Start** **Stop**

QC: **Date:** **SPC (Y/N):** **Date:**

Sequence ID/ Work Center ID	Operation Description	Set Up/ Run Hours	Tool ID	Tool #	Plan Code	Accept Qty	Reject Qty	Reject Number	Insp. Stamp
Draw Nbr: D2590	Revision Nbr: RevD DEO-D1								
100		0.00							
DC		0.00							
Document Control	Memo: Photocopy bluefile &type labels per PPP D204-635-041 CHG 004								

Mady

Dart Aerospace Ltd

W/O:		WORK ORDER CHANGES					
DATE	STEP	PROCEDURE CHANGE	By	Date	Qty	Approval Chief Eng / Prod Mgr	Approval QC Inspector

Part No: _____ **PAR #:** _____ **Fault Category:** _____ **NCR:** Yes No **DQA:** _____ **Date:** _____

Resolution: _____ **Disposition:** _____ **QA: N/C Closed:** _____ **Date:** _____

NCR:		WORK ORDER NON-CONFORMANCE (NCR)						
DATE	STEP	Description of NC Section A	Corrective Action Section B			Verification Section C	Approval Chief Eng	Approval QC Inspector
			Initial Chief Eng	Action Description Chief Eng	Sign & Date			

NOTE: Date & initial all entries

H:\FORMS\Quality Assurance\approved QA\NCRWO RevE

Work Order ID 68975

Tuesday, April 26, 2011 2:30:41 PM

Item ID: D204-635-041 **Accept** **Setup Start** **Stop**

Revision ID:

Item Name: Replacement Skidtube

Start Date: 4/27/2011 **Start Qty:** 1.00 **Cust Item ID:**

Required Date: 5/10/2011 **Req'd Qty:** 1.00 **Customer:**

Reference:

Approvals: **Process Plan:** _____ **Date:** _____ **Tooling:** _____ **Date:** _____ **Run Start** **Stop**

QC: _____ **Date:** _____ **SPC (Y/N):** _____ **Date:** _____

Sequence ID/ Work Center ID	Operation Description	Set Up/ Run Hours	Tool ID	Tool #	Plan Code	Accept Qty	Reject Qty	Reject Number	Insp. Stamp
110		0.00							
Skidtubes		0.00							
Skidtubes									

Memo

1- Inspect mat'l D2500-1-190 for damage

2-Cut D2500-1-190 per Dwg D2590 .Deburr ends

3-Drill pilot holes using drill jig DT 8149 & DT8711-1&-2 and open to finish size as per dwg

4-Deburr holes as per QSI002 section 4.2.3 and blow out all chips from inside of tube

5-Acid etch and Alodine tube per QSI 005 4.1

6-Bond web in place per QSI 015. Allow 12 Hrs. cure time before cutting

Pick:

Qty □Part Number□ Description□□Batch

A/R □□□ Sikaflex-291 | □3116948□□□

Sikaflex expire date: 12/01/15

Start Time: 4:00

Fin Time: 4:15

BB 11/05/08

Dart Aerospace Ltd

W/O:		WORK ORDER CHANGES					
DATE	STEP	PROCEDURE CHANGE	By	Date	Qty	Approval Chief Eng / Prod Mgr	Approval QC Inspector

Part No: _____ **PAR #:** _____ **Fault Category:** _____ **NCR:** Yes No **DQA:** _____ **Date:** _____

Resolution: _____ **Disposition:** _____ **QA: N/C Closed:** _____ **Date:** _____

NCR:		WORK ORDER NON-CONFORMANCE (NCR)						
DATE	STEP	Description of NC Section A	Corrective Action Section B			Verification Section C	Approval Chief Eng	Approval QC Inspector
			Initial Chief Eng	Action Description Chief Eng	Sign & Date			

NOTE: Date & initial all entries

H:\fFORMS\Quality Assurance\approved QA\NCRWO RevE

Work Order ID 68975

Tuesday, April 26, 2011 2:30:41 PM

Item ID: D204-635-041 **Accept** **Setup Start** **Stop**

Revision ID:

Item Name: Replacement Skidtube

Start Date: 4/27/2011 **Start Qty:** 1.00 **Cust Item ID:**

Required Date: 5/10/2011 **Req'd Qty:** 1.00 **Customer:**

Reference:

Run Start **Stop**

Approvals: **Process Plan:** _____ **Date:** _____ **Tooling:** _____ **Date:** _____

QC: _____ **Date:** _____ **SPC (Y/N):** _____ **Date:** _____

Sequence ID/ Work Center ID	Operation Description	Set Up/ Run Hours	Tool ID	Tool #	Plan Code	Accept Qty	Reject Qty	Reject Number	Insp. Stamp
120		0.00							
CNC Bend 1	**Memo**	0.00				1	0	BE	11/05/10
CNC Delta 100 Bender	Bend as per program D2590.C on CNC Bender								
130		0.00							
Skidtubes	**Memo**	0.00							
Skidtubes	1-Cut tubes as per Dwg. D2590 . 2-Deburr ends after cutting.								11/05/11
140	QC6- Inspect dimensions to drawing	0.00							
QC	**Memo**	0.00							11-5-11
Quality Control									

Dart Aerospace Ltd

W/O:		WORK ORDER CHANGES					
DATE	STEP	PROCEDURE CHANGE	By	Date	Qty	Approval Chief Eng / Prod Mgr	Approval QC Inspector

Part No: _____ **PAR #:** _____ **Fault Category:** _____ **NCR:** Yes No **DQA:** _____ **Date:** _____

Resolution: _____ **Disposition:** _____ **QA: N/C Closed:** _____ **Date:** _____

NCR:		WORK ORDER NON-CONFORMANCE (NCR)						
DATE	STEP	Description of NC Section A	Corrective Action Section B			Verification Section C	Approval Chief Eng	Approval QC Inspector
			Initial Chief Eng	Action Description Chief Eng	Sign & Date			

NOTE: Date & initial all entries

H:\fFORMS\Quality Assurance\approved QA\NCRWO RevE

Work Order ID 68975

Tuesday, April 26, 2011 2:30:41 PM

Item ID: D204-635-041 **Accept** **Setup Start** **Stop**

Revision ID:

Item Name: Replacement Skidtube

Start Date: 4/27/2011 **Start Qty:** 1.00 **Cust Item ID:**

Required Date: 5/10/2011 **Req'd Qty:** 1.00 **Customer:**

Reference:

Run Start **Stop**

Approvals: **Process Plan:** _____ **Date:** _____ **Tooling:** _____ **Date:** _____

QC: _____ **Date:** _____ **SPC (Y/N):** _____ **Date:** _____

Sequence ID/ Work Center ID	Operation Description	Set Up/ Run Hours	Tool ID	Tool #	Plan Code	Accept Qty	Reject Qty	Reject Number	Insp. Stamp
150		0.00							
Skidtubes									
Skidtubes	**Memo**	0.00							
	1-Prepare tube for welding D2576-3 Step Remove alodine as required. BE 11/05/11								
	2-Weld step D2576 as per Dwg. D2590 and QSI 004 A/R□□□ Aluminum Rod M116577 BE 11/05/11								
	3-Grind weld flush on step BB 11/05/11								
	4-Insert D4202-1 spacer, swage as per QSI002 and trim/ grind flush per QSI002 and as per dwg WELDED BE 11/05/11 A/R M116577								
	5-Drill holes for wearplates using DT 8218 & DT8937 Open holes to 19/64", adjust stopper not to hit web.Deburr								
	6-Drill pilot holes for aft cap using DT 8215 Open holes to #6 Drill bit. Deburr BB 11/05/11								
	7-Drill pilot holes for Tow ring using DT9425, open to .640"and Deburr ****verified dim. before drilling**** BE 11/05/11								
160	QC10- Inspect visual per QSI004- ground welds	0.00							
QC									
Quality Control	**Memo**	0.00							

Dart Aerospace Ltd

W/O:		WORK ORDER CHANGES					
DATE	STEP	PROCEDURE CHANGE	By	Date	Qty	Approval Chief Eng / Prod Mgr	Approval QC Inspector

Part No: _____ **PAR #:** _____ **Fault Category:** _____ **NCR:** Yes No **DQA:** _____ **Date:** _____

Resolution: _____ **Disposition:** _____ **QA: N/C Closed:** _____ **Date:** _____

NCR:		WORK ORDER NON-CONFORMANCE (NCR)						
DATE	STEP	Description of NC Section A	Corrective Action Section B			Verification Section C	Approval Chief Eng	Approval QC Inspector
			Initial Chief Eng	Action Description Chief Eng	Sign & Date			

NOTE: Date & initial all entries

Work Order ID 68975

Tuesday, April 26, 2011 2:30:41 PM

Item ID: D204-635-041 **Accept** **Setup Start** **Stop**

Revision ID:

Item Name: Replacement Skidtube

Start Date: 4/27/2011 **Start Qty:** 1.00 **Cust Item ID:**

Required Date: 5/10/2011 **Req'd Qty:** 1.00 **Customer:**

Reference:

Run Start **Stop**

Approvals: **Process Plan:** _____ **Date:** _____ **Tooling:** _____ **Date:** _____

QC: _____ **Date:** _____ **SPC (Y/N):** _____ **Date:** _____

Sequence ID/ Work Center ID	Operation Description	Set Up/ Run Hours	Tool ID	Tool #	Plan Code	Accept Qty	Reject Qty	Reject Number	Insp. Stamp
170	QC6- Inspect dimensions to drawing	0.00							
QC	Memo	0.00							
Quality Control									
175	Pressure Wash per QSI005 4.3	0.00							
HandFinish	Memo	0.00							
Hand Finishing	Re-alodine tube as per QSI 005 section 4.1.2.1 do not acid etch.								
180	White Gloss(Ref:4.3.5.1) per QSI005 4.3-Alum	0.00							
Powdercoat	Memo	0.00							
Powder Coating	START TIME: 11:45 OVEN TEMPERATURE: 320 °F FINISH TIME: 12:15								

8 11/05/12

(1X) Ø M-f 11/05/12

1X Ø M-f 11/05/12

M116964

Dart Aerospace Ltd

W/O:		WORK ORDER CHANGES					
DATE	STEP	PROCEDURE CHANGE	By	Date	Qty	Approval Chief Eng / Prod Mgr	Approval QC Inspector

Part No: _____ **PAR #:** _____ **Fault Category:** _____ **NCR:** Yes No **DQA:** _____ **Date:** _____

Resolution: _____ **Disposition:** _____ **QA: N/C Closed:** _____ **Date:** _____

NCR:		WORK ORDER NON-CONFORMANCE (NCR)						
DATE	STEP	Description of NC Section A	Corrective Action Section B			Verification Section C	Approval Chief Eng	Approval QC Inspector
			Initial Chief Eng	Action Description Chief Eng	Sign & Date			

NOTE: Date & initial all entries

H:\fFORMS\Quality Assurance\approved QA\NCRWO RevE

Work Order ID 68975

Tuesday, April 26, 2011 2:30:41 PM

Item ID: D204-635-041 **Accept** **Setup** **Start**

Revision ID: **Stop**

Item Name: Replacement Skidtube

Start Date: 4/27/2011 **Start Qty:** 1.00 **Cust Item ID:**

Required Date: 5/10/2011 **Req'd Qty:** 1.00 **Customer:**

Reference:

Run **Start**

Approvals: **Process Plan:** _____ **Date:** _____ **Tooling:** _____ **Date:** _____ **Stop**

QC: _____ **Date:** _____ **SPC (Y/N):** _____ **Date:** _____

Sequence ID/ Work Center ID	Operation Description	Set Up/ Run Hours	Tool ID	Tool #	Plan Code	Accept Qty	Reject Qty	Reject Number	Insp. Stamp
190	QC3- Inspect Part Finish	0.00				1	ϕ		11/05/12
QC Quality Control	**Memo**	0.00							

Dart Aerospace Ltd

W/O:		WORK ORDER CHANGES					
DATE	STEP	PROCEDURE CHANGE	By	Date	Qty	Approval Chief Eng / Prod Mgr	Approval QC Inspector

Part No: _____ **PAR #:** _____ **Fault Category:** _____ **NCR:** Yes No **DQA:** _____ **Date:** _____

Resolution: _____ **Disposition:** _____ **QA: N/C Closed:** _____ **Date:** _____

NCR:		WORK ORDER NON-CONFORMANCE (NCR)						
DATE	STEP	Description of NC Section A	Corrective Action Section B			Verification Section C	Approval Chief Eng	Approval QC Inspector
			Initial Chief Eng	Action Description Chief Eng	Sign & Date			

NOTE: Date & initial all entries

H:\fFORMS\Quality Assurance\approved QA\NCRWO RevE

Work Order ID 68975

Tuesday, April 26, 2011 2:30:41 PM

Item ID: D204-635-041 **Accept** **Setup** **Start** **Stop**

Revision ID:

Item Name: Replacement Skidtube

Start Date: 4/27/2011 **Start Qty:** 1.00 **Cust Item ID:**

Required Date: 5/10/2011 **Req'd Qty:** 1.00 **Customer:**

Reference:

Run **Start** **Stop**

Approvals: **Process Plan:** _____ **Date:** _____ **Tooling:** _____ **Date:** _____

QC: _____ **Date:** _____ **SPC (Y/N):** _____ **Date:** _____

Sequence ID/ Work Center ID	Operation Description	Set Up/ Run Hours	Tool ID	Tool #	Plan Code	Accept Qty	Reject Qty	Reject Number	Insp. Stamp
200		0.00				1	ϕ	M 11/05/13	
HandFinish	**Memo**	0.00							
Hand Finishing	1-Install inserts & wearplates & gaskets using a drop of Sikaflex on insert holes before installing wearplates A/R ☐☐☐ Sikaflex-291 ☐ M11169445 Sikaflex expire date: 12/01								
	2-Coat D2594-3 O' rings with Petroleum Jelly and install on D2594-1 plugs as per Dwg D2580								
	3-Inspect for foreign object per QSI 024								
	4-Install 2855 Aft Cap as per Dwg D2590 and seal Fwd Step & Aft Cap with Sikaflex. Clean excess adhesive A/R ☐ ☐☐ Sikaflex-291 ☐ M11169445 Sikaflex expire date: 12/01								
	5-Wing Walk as per Dwg D2590 and QSI 005 4.4 Batch: M11173 15								

Dart Aerospace Ltd

W/O:		WORK ORDER CHANGES					
DATE	STEP	PROCEDURE CHANGE	By	Date	Qty	Approval Chief Eng / Prod Mgr	Approval QC Inspector

Part No: _____ **PAR #:** _____ **Fault Category:** _____ **NCR:** Yes No **DQA:** _____ **Date:** _____

Resolution: _____ **Disposition:** _____ **QA: N/C Closed:** _____ **Date:** _____

NCR:		WORK ORDER NON-CONFORMANCE (NCR)						
DATE	STEP	Description of NC Section A	Corrective Action Section B			Verification Section C	Approval Chief Eng	Approval QC Inspector
			Initial Chief Eng	Action Description Chief Eng	Sign & Date			

NOTE: Date & initial all entries

Work Order ID 68975

Tuesday, April 26, 2011 2:30:41 PM

Item ID: D204-635-041 **Accept** **Setup Start** **Stop**

Revision ID:

Item Name: Replacement Skidtube

Start Date: 4/27/2011 **Start Qty:** 1.00 **Cust Item ID:**

Required Date: 5/10/2011 **Req'd Qty:** 1.00 **Customer:**

Reference:

Run Start **Stop**

Approvals: **Process Plan:** _____ **Date:** _____ **Tooling:** _____ **Date:** _____

QC: _____ **Date:** _____ **SPC (Y/N):** _____ **Date:** _____

Sequence ID/ Work Center ID	Operation Description	Set Up/ Run Hours	Tool ID	Tool #	Plan Code	Accept Qty	Reject Qty	Reject Number	Insp. Stamp
210	QC5- Inspect part completeness to step on W/O	0.00							
QC	Memo	0.00							
Quality Control									
215	Identify as per dwg & Stock Location: _____	0.00							
Packaging	Memo	0.00							
Packaging									
220	QC21- Final Inspection - Work Order Release	0.00							
QC	Memo	0.00							
Quality Control									

Dart Aerospace Ltd

W/O:		WORK ORDER CHANGES					
DATE	STEP	PROCEDURE CHANGE	By	Date	Qty	Approval Chief Eng / Prod Mgr	Approval QC Inspector

Part No: _____ **PAR #:** _____ **Fault Category:** _____ **NCR:** Yes No **DQA:** _____ **Date:** _____

Resolution: _____ **Disposition:** _____ **QA: N/C Closed:** _____ **Date:** _____

NCR:		WORK ORDER NON-CONFORMANCE (NCR)						
DATE	STEP	Description of NC Section A	Corrective Action Section B			Verification Section C	Approval Chief Eng	Approval QC Inspector
			Initial Chief Eng	Action Description Chief Eng	Sign & Date			

NOTE: Date & initial all entries

H:\fFORMS\Quality Assurance\approved QA\NCRWO RevE

Picklist Print

Tuesday, April 26, 2011 2:30:35 PM

5

Work Order ID: 68975

Parent Item: D204-635-041

Parent Item Name: Replacement Skidtube

Start Date: 4/27/2011 **Required Date:** 5/10/2011

Start Qty: 1.00 **Required Qty:** 1.00

Comments: IPP Rev:F□02.08.28□FP was QC5 in Step 27; Added QC5 to Step 30□KJ
IPP Rev:G 07-07-09 Added SS Wearplates & Gaskets JLM IPP RevH:
add identifify and stock seq DD 10.01.28 verf:EC
IPP Rev:I 10.12.01 as per DEO DD
verf:EC

Component Item ID/ Item Name	Replacement Item ID	Mfg/ Purch	Bin Item	Primary Location	Last Location	Route Seq ID	Unit of Measure	Qty on Hand	Qty per Kit	Total Qty	Qty Issued	Date Issued	Status
ALS7-1032-130		Purchased	No			180	Each	207.0000	44	44			
Insert										JL 11/05/12			
				Location			**Loc Qty**		**Loc Code**				
				ST281			200						
					117331		200			X44			
				ST282			7						
					116800		7						
AN3-5A		Purchased	No			180	Each	1,216.000	2	2			
Bolt										JL 11/05/12			
				Location			**Loc Qty**		**Loc Code**				
				ST350			1216						
					115371		416			X2			
					117423		800						
AN3C4A		Purchased	No			180	Each	2,306.000	44	44			
BOLT										JL 11/05/12			
				Location			**Loc Qty**		**Loc Code**				
				ST350			2306						
					116924		310						
					117094		996						
					117313		1000			X44			

Dart Aerospace Ltd

W/O:		WORK ORDER CHANGES					
DATE	STEP	PROCEDURE CHANGE	By	Date	Qty	Approval Chief Eng / Prod Mgr	Approval QC Inspector

Part No: _____ **PAR #:** _____ **Fault Category:** _____ **NCR:** Yes No **DQA:** _____ **Date:** _____

Resolution: _____ **Disposition:** _____ **QA: N/C Closed:** _____ **Date:** _____

NCR:		WORK ORDER NON-CONFORMANCE (NCR)						
DATE	STEP	Description of NC Section A	Corrective Action Section B			Verification Section C	Approval Chief Eng	Approval QC Inspector
			Initial Chief Eng	Action Description Chief Eng	Sign & Date			

NOTE: Date & initial all entries

Picklist Print

Tuesday, April 26, 2011 2:30:35 PM

Work Order ID: 68975

Parent Item: D204-635-041

Parent Item Name: Replacement Skidtube

Start Date: 4/27/2011 **Required Date:** 5/10/2011

Start Qty: 1.00 **Required Qty:** 1.00

AN960C10L	NAS1149C0332R	Purchased	No	180	Each	0.0000	44	44	
washer									M117291 (x44) 11/05/12
AN960JD10L	NAS1149D0332J	Purchased	No	180	Each	0.0000	2	2	
Washer									M117291 (x2) 11/05/12
D2594-1		Manufactured	No	180	Each	403.0000	10	10	
Plug, 205 Skidtube									11/05/12

Location	Loc Qty	Loc Code	
FP-A	403		
42807	28		
66122	148		
66932	220		x10
67441	7		

D2594-3		Manufactured	No	180	Each	1,304.000	10	10	
O-Ring, 205 Skidtube									11/05/12

Location	Loc Qty	Loc Code	
FP-A	1304		
65518	304		x10
66952	1000		

D2855		Manufactured	No	180	Each	70.0000	1	1	
Cap									11/05/12

Location	Loc Qty	Loc Code	
FP007	70		
52791	33		x1
65519	2		
65569	35		

Dart Aerospace Ltd

W/O:		WORK ORDER CHANGES					
DATE	STEP	PROCEDURE CHANGE	By	Date	Qty	Approval Chief Eng / Prod Mgr	Approval QC Inspector

Part No: _____ **PAR #:** _____ **Fault Category:** _____ **NCR:** Yes No **DQA:** _____ **Date:** _____

Resolution: _____ **Disposition:** _____ **QA: N/C Closed:** _____ **Date:** _____

NCR:		WORK ORDER NON-CONFORMANCE (NCR)						
DATE	STEP	Description of NC Section A	Corrective Action Section B			Verification Section C	Approval Chief Eng	Approval QC Inspector
			Initial Chief Eng	Action Description Chief Eng	Sign & Date			

NOTE: Date & initial all entries

H:\fFORMS\Quality Assurance\approved QA\NCRWO RevE

Picklist Print

Tuesday, April 26, 2011 2:30:35 PM

Work Order ID: 68975

Parent Item: D204-635-041

Parent Item Name: Replacement Skidtube

Start Date: 4/27/2011 **Required Date:** 5/10/2011

Start Qty: 1.00 **Required Qty:** 1.00

D3564-11	Manufactured	No	180	Each	2.0000	1	1	JL 11/05/12
Wearshoe								

Location	Loc Qty	Loc Code	
FP019	2	368350	X1
66154	2		

D3564-13	Manufactured	No	180	Each	38.0000	1	1	JL 11/05/12
Wearshoe								

Location	Loc Qty	Loc Code	
FP017	38		
66136	16		X1
66549	6		
66805	16		

D3564-7	Manufactured	No	180	Each	15.0000	1	1	JL 11/05/12
Wearshoe								

Location	Loc Qty	Loc Code	
FP019	15		X1
33803	4		
43229	11		

D3564-9	Manufactured	No	180	Each	3.0000	1	1	JL 11/05/12
Wearshoe								

Location	Loc Qty	Loc Code	
FP019	3		X1
67590	3	368349	

Dart Aerospace Ltd

W/O:		WORK ORDER CHANGES					
DATE	STEP	PROCEDURE CHANGE	By	Date	Qty	Approval Chief Eng / Prod Mgr	Approval QC Inspector

Part No: _____ **PAR #:** _____ **Fault Category:** _____ **NCR:** Yes No **DQA:** _____ **Date:** _____

Resolution: _____ **Disposition:** _____ **QA: N/C Closed:** _____ **Date:** _____

NCR:		WORK ORDER NON-CONFORMANCE (NCR)						
DATE	STEP	Description of NC Section A	Corrective Action Section B			Verification Section C	Approval Chief Eng	Approval QC Inspector
			Initial Chief Eng	Action Description Chief Eng	Sign & Date			

NOTE: Date & initial all entries

H:\fFORMS\Quality Assurance\approved QA\NCRWO RevE

Picklist Print

Tuesday, April 26, 2011 2:30:36 PM

Work Order ID: 68975

Parent Item: D204-635-041

Parent Item Name: Replacement Skidtube

Start Date: 4/27/2011 **Required Date:** 5/10/2011

Start Qty: 1.00 **Required Qty:** 1.00

D3566-1	Manufactured	No	180	Each	73.0000	2	2	
Gasket								

Location	Loc Qty	Loc Code
FP015	73	
68344	34	
68924	39	x2

D3566-13	Manufactured	No	180	Each	41.0000	1	1	
Gasket								

Location	Loc Qty	Loc Code
FP014	41	
66550	21	x1
68341	20	

D3566-7	Manufactured	No	180	Each	24.0000	1	1	
Gasket								

Location	Loc Qty	Loc Code
FP015	24	
37354	4	x1
55490	20	

~~1942031~~ D2579	Manufactured	No	150	Each	443.0000	17	17	
Spacer								

Location	Loc Qty	Loc Code
LG002	443	
66929	106	
67129	196	
67308	1	
67430	140	

Dart Aerospace Ltd

W/O:		WORK ORDER CHANGES					
DATE	STEP	PROCEDURE CHANGE	By	Date	Qty	Approval Chief Eng / Prod Mgr	Approval QC Inspector

Part No: _____ PAR #: _____ Fault Category: _____ NCR: Yes No DQA: _____ Date: _____

Resolution: _____ Disposition: _____ QA: N/C Closed: _____ Date: _____

NCR:		WORK ORDER NON-CONFORMANCE (NCR)						
DATE	STEP	Description of NC Section A	Corrective Action Section B			Verification Section C	Approval Chief Eng	Approval QC Inspector
			Initial Chief Eng	Action Description Chief Eng	Sign & Date			

NOTE: Date & initial all entries

H:\fFORMS\Quality Assurance\approved QA\NCRWO RevE

Picklist Print

Tuesday, April 26, 2011 2:30:36 PM

Work Order ID: 68975

Parent Item: D204-635-041

Parent Item Name: Replacement Skidtube

Start Date: 4/27/2011 **Required Date:** 5/10/2011

Start Qty: 1.00 **Required Qty:** 1.00

D2500-1-190	Manufactured	No	110	Each	67.0000	1	1	
Ext'n -'I' Beam Tube 4"								

Location	Loc Qty	Loc Code
HALL	23	
58427	23	
LG	44	
66296	44	

BB 11/05/09

D2597	Manufactured	No	110	Each	0.0000	1	1	
204 Web								
D2576-3	Manufactured	No	150	Each	9.0000	1	1	
Step (maching detail)								

69325

BB. 11/05/09

DE 4/05/11

Location	Loc Qty	Loc Code
LG	9	
52215	9	

Dart Aerospace Ltd

W/O:		WORK ORDER CHANGES					
DATE	STEP	PROCEDURE CHANGE	By	Date	Qty	Approval Chief Eng / Prod Mgr	Approval QC Inspector

Part No: _____ PAR #: _____ Fault Category: _____ NCR: Yes No DQA: _____ Date: _____

Resolution: _____ Disposition: _____ QA: N/C Closed: _____ Date: _____

NCR:		WORK ORDER NON-CONFORMANCE (NCR)						
DATE	STEP	Description of NC Section A	Corrective Action Section B			Verification Section C	Approval Chief Eng	Approval QC Inspector
			Initial Chief Eng	Action Description Chief Eng	Sign & Date			

NOTE: Date & initial all entries

M:\fFORMS\Quality Assurance\approved QA\NCRWO RevE

DESIGN	DRAWN BY	DART AEROSPACE LTD HAWKESBURY, ONTARIO, CANADA
CHECKED	APPROVED	DRAWING NO. D2590 — REV. D — SHEET 1 OF 2
DATE 07.04.05		TITLE 204 SKIDTUBE ASSEMBLY — SCALE NTS

A	96.09.16	NEW ISSUE
B	96.12.02	AS MANUFACTURED
C	98.08.28	REDRAWN, INCLUDED DEO 9094/9097
D	07.04.05	CHANGE TO SS WEARPLATES AND GASKETS, INCLUDE DEO 9124

RELEASED 07.06.28

DEO ATTACHED

QTY -041	Part Number	Description
X	D2590-041	SKIDTUBE ASSEMBLY
1	D2500-1-190	EXTRUSION
1	D2576-3	STEP
17	D2579	CROSS BOLT SPACER
10	D2594-1	PLUG
10	D2594-3	O-RING
1	D2597	204 WEB
1	D2855	AFT CAP
1	D3564-7	WEARSHOE
1	D3564-9	WEARSHOE
1	D3564-11	WEARSHOE
1	D3564-13	WEARSHOE
2	D3566-1	GASKET
1	D3566-7	GASKET
1	D3566-13	GASKET
44	ALS7-1032-130 or AKS7-1032-130 or AKS4-1032-130 or AELS-1032-130	INSERT
44	AN3C4A	BOLT
2	AN3-5A	BOLT
44	AN960C10L	WASHER
2	AN960JD10L	WASHER

GENERAL NOTES:

1) TOLERANCES ARE PER DART QSI 018 UNLESS OTHERWISE NOTED
2) ALL DIMENSIONS ARE IN INCHES
3) INSERT D2597 WEB TO LOCATION SHOWN OFF AFT END OF SKIDTUBE AND BOND WEB INTO OUTER TUBE WITH NON-STRUCTURAL SIKAFLEX-241 ADHESIVE PER DART QSI 015 BEFORE BENDING. ENSURE HOLES LINE-UP.
4) BEND AS A SMOOTH RADIUS STARTING WITH A MAXIMUM CENTERLINE RADIUS OF 60 AND ENDING WITH A MINIMUM RADIUS OF 30. A MAXIMUM REDUCTION OF 0.200 IN DIAMETER IS ALLOWABLE IN THE BENT PORTION OF THE TUBE.
5) USE DART DRILL TEMPLATE TD2577-204 TO LOCATE AND DRILL Ø0.297 HOLES FOR WEARSHOE INSERTS. INSTALL ALS7-1032-130 PER SECTION D-D (44 PLACES) AFTER FINISH. INSTALL AN3C4A BOLTS AND AN960C10L WASHERS WITH SIKAFLEX-241/-291.
6) WELDING TO BE DONE PER DART QSI 004.
7) FINISH:
   ACID ETCH, ALODINE PER DART QSI 005 4.1 PRIOR TO INSERTING D2596 WEB
   POWDER COAT ASSEMBLY GLOSS WHITE (REF 4.3.5.1) PER DART QSI 005 4.3
   BLACK ANTI-SKID PAINT AS INDICATED PER DART QSI 005 4.4
8) INSERT D2594-1 PLUG C/W D2594-3 O-RING IN HOLES MARKED 'P' (BOTH SIDES OF TUBE) AFTER FINISH (16 PLACES).

Copyright © 1996 by DART AEROSPACE LTD

THIS DOCUMENT IS PRIVATE AND CONFIDENTIAL AND IS SUPPLIED ON THE EXPRESS CONDITION THAT IT IS NOT TO BE USED FOR ANY PURPOSE OR COPIED OR COMMUNICATED TO ANY OTHER PERSON WITHOUT WRITTEN PERMISSION FROM DART AEROSPACE LTD.

Dart Aerospace Ltd

W/O:		WORK ORDER CHANGES					
DATE	STEP	PROCEDURE CHANGE	By	Date	Qty	Approval Chief Eng / Prod Mgr	Approval QC Inspector

Part No: _____ PAR #: _____ Fault Category: _____ NCR: Yes No DQA: _____ Date: _____

Resolution: _____ Disposition: _____ QA: N/C Closed: _____ Date: _____

NCR:		WORK ORDER NON-CONFORMANCE (NCR)						
DATE	STEP	Description of NC Section A	Corrective Action Section B			Verification Section C	Approval Chief Eng	Approval QC Inspector
			Initial Chief Eng	Action Description Chief Eng	Sign & Date			

NOTE: Date & initial all entries

H:\fFORMS\Quality Assurance\approved QA\NCRWO RevE

DETAIL A
SCALE 5:24

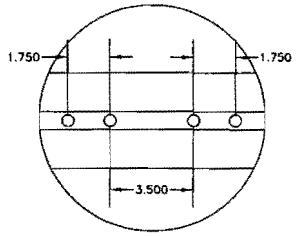

RELEASED
07.06.28

DEO ATTACHED

DETAIL B
SCALE 5:24

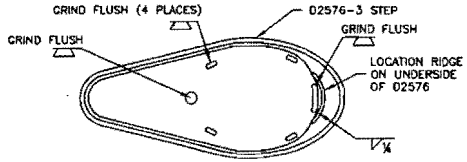

DETAIL C
SCALE 5:24

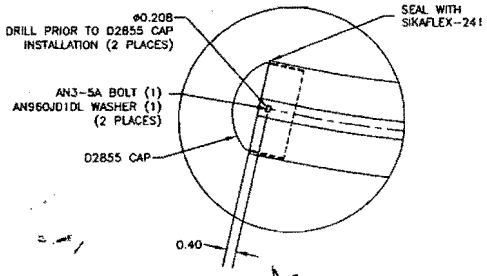

SL6890

SECTION D-D
SCALE 5:24

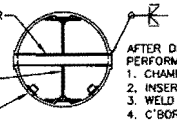

AFTER DRILLING AND BENDING ASSEMBLY PERFORM THE FOLLOWING FOR ø0.508 HOLES ONLY:
1. CHAMFER HOLE 0.050 X 45°
2. INSERT D2579 SPACER (17 PLACES)
3. WELD INTO PLACE AND GRIND FLUSH
4. C'BORE D2579 SPACER TO ø0.437 X 1.00 DEEP

D2590-1 DRILLING DETAIL

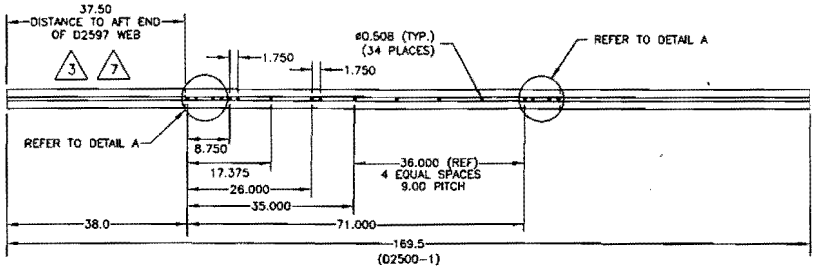

D2590-1 BENDING AND CUTTING DETAIL

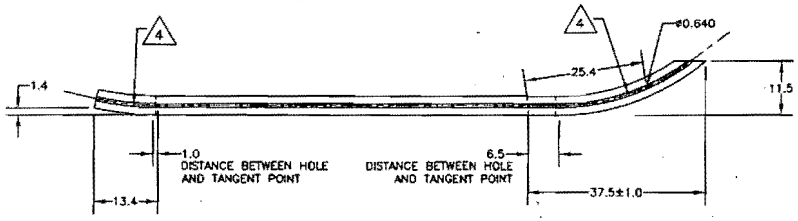

D2590-041 ASSEMBLY DETAIL

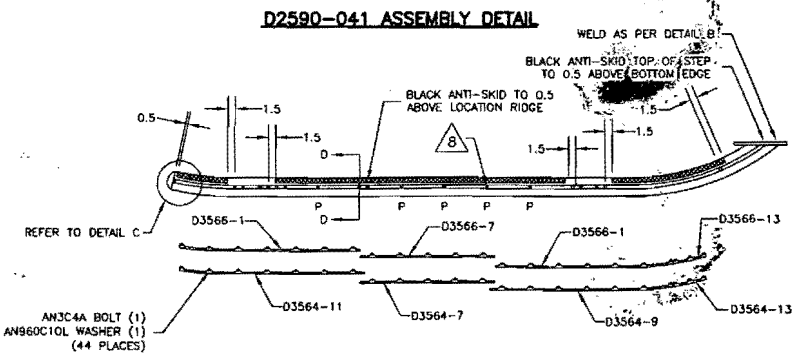

COPYRIGHT © 1996 BY DART AEROSPACE LTD.

THIS DOCUMENT IS PRIVATE AND CONFIDENTIAL AND IS SUPPLIED ON THE EXPRESS CONDITION THAT IT IS NOT TO BE USED FOR ANY PURPOSE OR COPIED OR COMMUNICATED TO ANY OTHER PERSON WITHOUT WRITTEN PERMISSION FROM DART AEROSPACE LTD.

DESIGN	DRAWN BY	DART AEROSPACE LTD. HAWKESBURY, ONTARIO, CANADA	
CHECKED	APPROVED	DRAWING NO. D2590	REV. D SHEET 2 OF 2
DATE 07.04.05		TITLE 204 SKIDTUBE ASSEMBLY	SCALE 1:24

Dart Aerospace Ltd

W/O:		WORK ORDER CHANGES					
DATE	STEP	PROCEDURE CHANGE	By	Date	Qty	Approval Chief Eng / Prod Mgr	Approval QC Inspector

Part No: _____ **PAR #:** _____ **Fault Category:** _____ **NCR:** Yes No **DQA:** _____ **Date:** _____

Resolution: _____ **Disposition:** _____ **QA: N/C Closed:** _____ **Date:** _____

NCR:		WORK ORDER NON-CONFORMANCE (NCR)						
DATE	STEP	Description of NC Section A	Corrective Action Section B			Verification Section C	Approval Chief Eng	Approval QC Inspector
			Initial Chief Eng	Action Description Chief Eng	Sign & Date			

NOTE: Date & initial all entries

H:\fFORMS\Quality Assurance\approved QA\NCRWO RevE

DRAWING NO.	TITLE	REV. D	DART AEROSPACE LTD ENGINEERING ORDER	D.E.O. NO.	SHEET NO.	SCALE
D2590	204 SKIDTUBE ASSEMBLY			D2590-D-1	SHEET 1 OF 1	NTS

DRAWN	CHECKED	MFG. APPR.	APPROVED	DE APPR.
DATE 10.09.22	DATE 10.11.04	DATE 10.11.04	DATE 10/11/04	DATE 10.11.04

PURPOSE:
CHANGE ALL WELDED CROSSBOLT SPACERS TO SWAGED SPACERS

RELEASED
2010 -11- 17
NP

CHANGE:
PARTS LIST IS AMENDED AS FOLLOWS:

WAS

QTY -041	PART NUMBER	DESCRIPTION
17	D2579	CROSS BOLT SPACER

IS

17	D4202-1	SPACER

SECTION D-D IS AMENDED AS FOLLOWS:

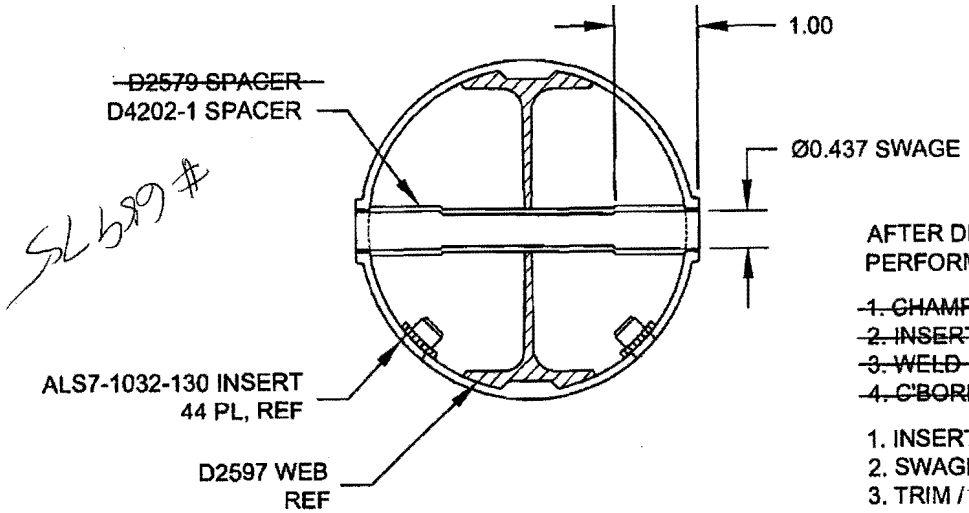

AFTER DRILLING AND BENDING ASSEMBLY
PERFORM THE FOLLOWING FOR Ø0.508 HOLES ONLY:

~~1. CHAMFER HOLE 0.050 X 45°~~
~~2. INSERT D2579 SPACER (17 PLACES)~~
~~3. WELD INTO PLACE AND GRIND FLUSH~~
~~4. C'BORE D2579 SPACER TO Ø0.437 X 1.00 DEEP~~

1. INSERT D4202-1 SPACER, 17 PL
2. SWAGE TO Ø0.437 X 1.00 DEEP PER QSI 002
3. TRIM / GRIND FLUSH PER QSI 002

SECTION D-D
NOT TO SCALE

COPYRIGHT © 2010 BY DART AEROSPACE LTD
THIS DOCUMENT IS PRIVATE AND CONFIDENTIAL AND IS SUPPLIED ON THE EXPRESS CONDITION THAT IT IS NOT TO BE USED FOR ANY PURPOSE OR COPIED OR COMMUNICATED TO ANY OTHER PERSON WITHOUT WRITTEN PERMISSION FROM DART AEROSPACE LTD.

Dart Aerospace Ltd

W/O:		WORK ORDER CHANGES					
DATE	STEP	PROCEDURE CHANGE	By	Date	Qty	Approval Chief Eng / Prod Mgr	Approval QC Inspector

Part No: _____ **PAR #:** _____ **Fault Category:** _____ **NCR:** Yes No **DQA:** _____ **Date:** _____

Resolution: _____ **Disposition:** _____ **QA: N/C Closed:** _____ **Date:** _____

NCR:		WORK ORDER NON-CONFORMANCE (NCR)						
DATE	STEP	Description of NC Section A	Corrective Action Section B			Verification Section C	Approval Chief Eng	Approval QC Inspector
			Initial Chief Eng	Action Description Chief Eng	Sign & Date			

NOTE: Date & initial all entries

H:\fFORMS\Quality Assurance\approved QA\NCRWO RevE

NO. 252

AWS D17.1.2001
QUALIFICATION TEST RECORD

Name: Barclay Elliott
Job number: 66358
Part number: D206 642 541
Description: 206
Welding Process: Tig[X] Mig[ ]
Base materiel: Aluminum
Current: AC[X] DC[ ]

TEST REQUIREMENTS AND RESULTS

Visual:	pass[X]	fail[ ]
Penetration:	pass[X]	fail[ ]

UNACCEPTABLE

Cracks:	pass[X]	fail[ ]
Undercut:	pass[X]	fail[ ]
Pin holes:	pass[X]	fail[ ]
Overlap (cold lap)	pass[X]	fail[ ]
Porosity (surface):	pass[X]	fail[ ]
Coloration:	pass[X]	fail[ ]

Qualifier Pat Cuyos **Date of Test Coupon** 11·05·09

Welder Barclay Elliott **Date of Test Coupon** 11·05·09

The above named individual is qualified in accordance with AWS D17.1.2001 to weld